- Quality Is Our Nature
- In Search of Excellence
- LEADWELL Leads the Industry in Taiwan, in the World

LEADWELL

LEADWELL CNC MACHINES MFG.,CORP.

VTL Series

HEAVY DUTY CNC VERTICAL LATHE

LEADWELL CNC MACHINES MFG.,CORP.

NO.23, Gong 33th Road, Taichung Industrial Park
Taichung 407, Taiwan
TEL: 886-4-23591880
FAX: 886-4-23592555, 23593875
E-mail: sales@leadwell.com.tw

www.leadwell.com.tw

※ All performance are based on 220V/3PH/60HZ. Specification are subject to change without notice.

2016.07

VTL SERIES
STRUCTURE

Rugged Machine Construction Guarantee of Rigidity and Stability

- For big, thin, heavy and irregular work-pieces, it is easy to machine and to load/un-load.
- Multi-function design is easy to operate and reducing the operating cost.
- LEADWELL vertical turning lathes are designed for high accuracy, rigidity, stability, efficiency, heavy cutting, and non-symmetric work-pieces.
- Our column is designed for symmetric heavy box structure that provides maximum support for the sliding cross-rail during heavy cutting.
- The outstanding structure and design for high rigidity displays mechanical features under super heavy cutting, which ensures the minimum level of machining inaccuracy. Also the high stability increases the tool life.
- X-axis box structure slide-ways are processed with heat treatment and the sliding surfaces are coated Turcite B which assemblies to move with high precision, accuracy and low friction. The highest degree of machining precision will be maintained during heavy uninterrupted cutting operations.
- Leadwell is highly proud of our machines' quality. To achieve this, we put our machines under multiple tests before we qualify the machines.

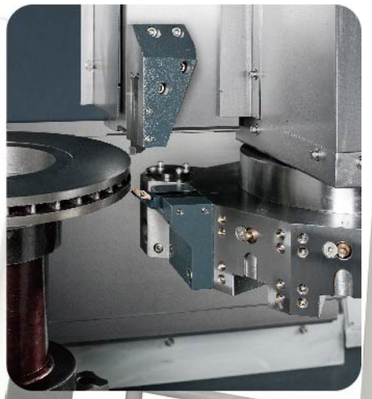

Twin Turrets for Break Disc (Opt)

VTL-450 structure
Linear Way

VTL-800 structure
Box Way

TABLE MANUAL FOUR JAW CHUCK
- SHORTED TAPER MOUNTED
  The chuck is mounted into a short-nose spindle for added stability and high centering accuracy.
- TAPER ROLLER BEARING
  Taper roller bearings enable table runs stably and resist cutting force.

TABLE BEARINGS
The thrust roller bearings provide excellent loading capacity for workpiece, table and greater cutting force resistance.

TABLE DRIVING GEAR
The table rotation is transmitted through a heavy pitch gear. It is precision machined from nickel-chrome molybdenum alloy steel, hardened and precision ground for maximum wear resistance and high accuracy.

VTL SERIES FEATURES

LEADWELL Guarantees Superior Stability and Accuracy

- Highly rigid cross roller guide ways enable heavy cutting.
- Ac servo motor & high accuracy roller ball screw, direct drive, as well as pretension, minimal thermal extension, enhances repeatability and positioning accuracy.
- User-friendly design.
- High speed / accuracy / rigid spindle using NN series bearing, which allows to perform both axial & radial cutting.
- Swivel control panel.
- Solid construction, square design, with minimum vibration.

■ *ERGONOMIC CONSIDERATIONS*

- *Easy to use membrane touch-pad control station*

Excellent Disposal for Chips & Coolant

- *The wide chip conveyor ensures easy chip removal*

VTL SERIES SPINDLE POWER CURVE

VTL-450 αP40

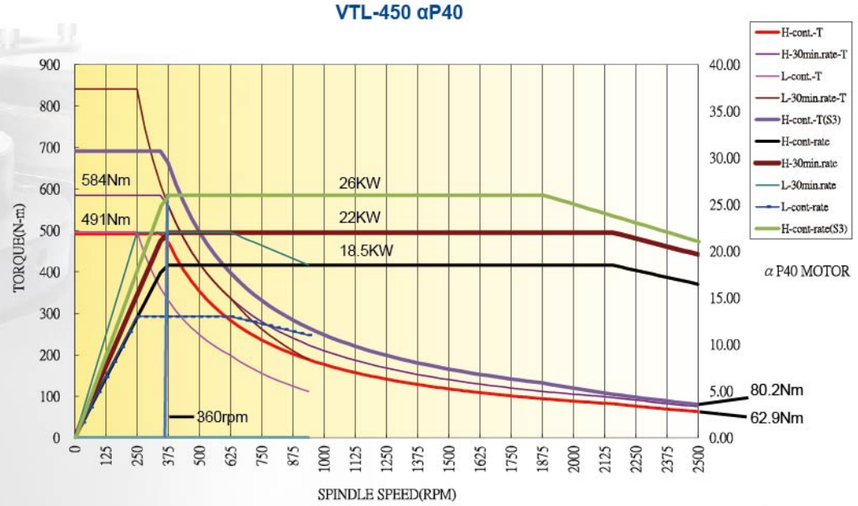

VTL-600 / VTL-600M αP40

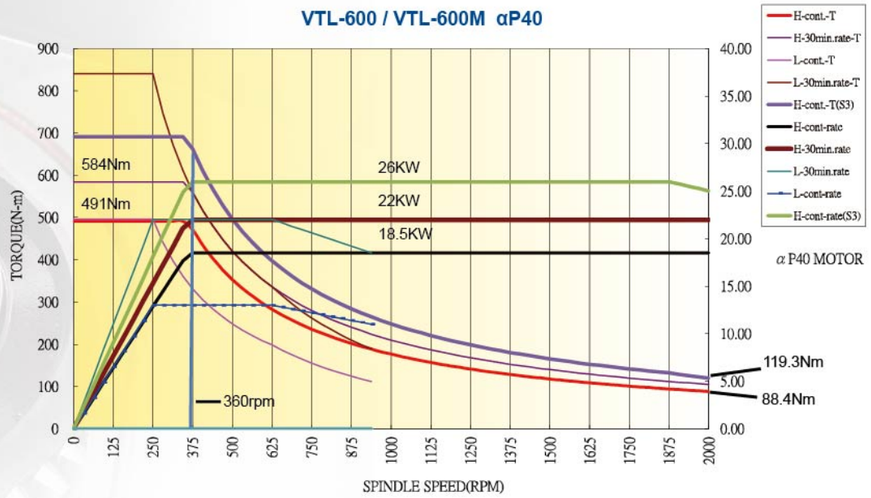

VTL-800 / VTL-800M αP50

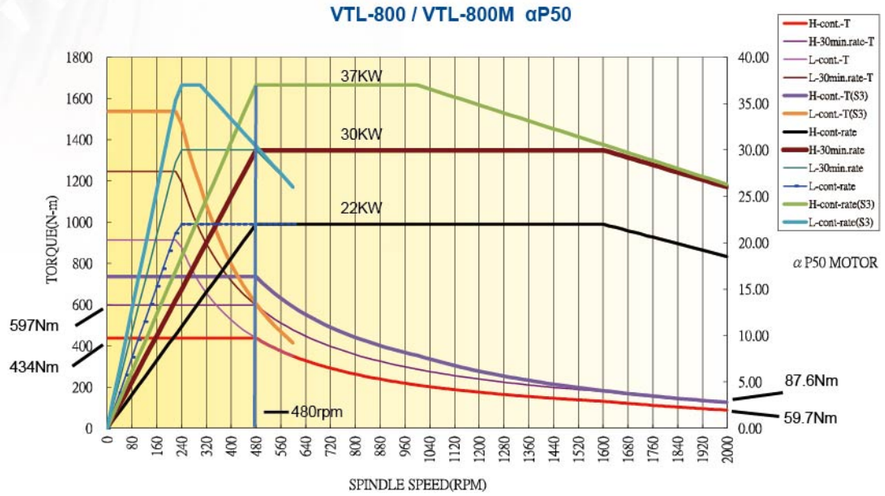

VTL SERIES
TOOLING SYSTEM

Tooling System

VTL-450

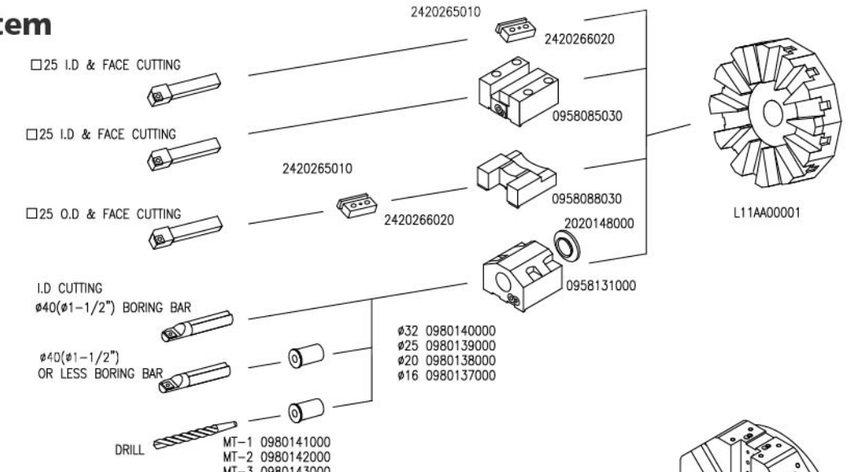

VTL-600

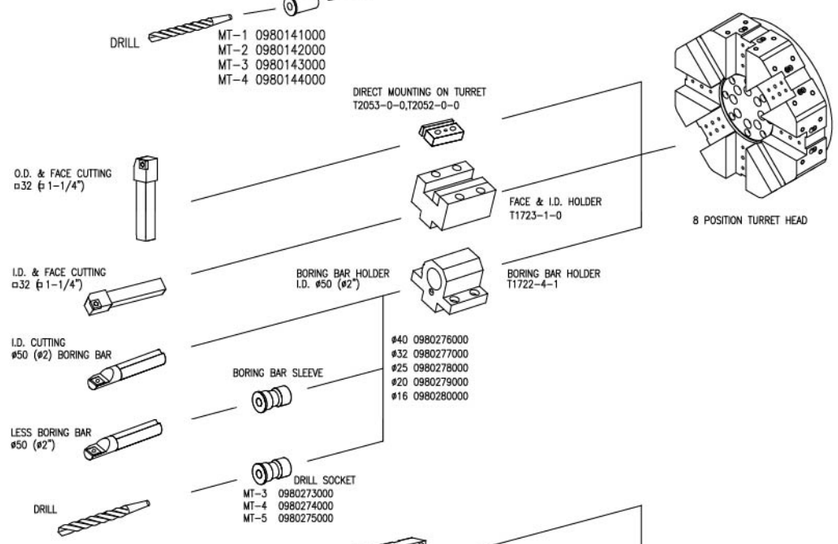

VTL-600M

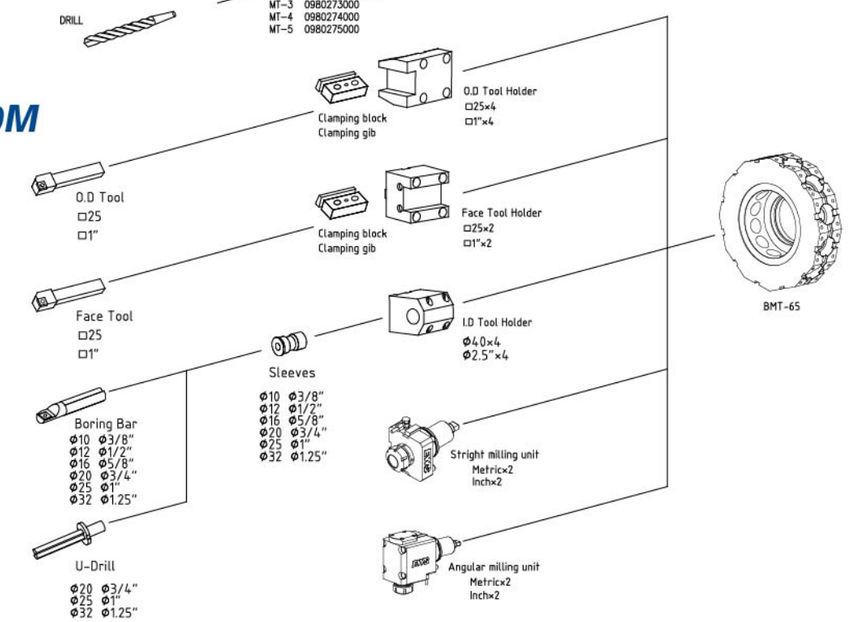

VTL-800

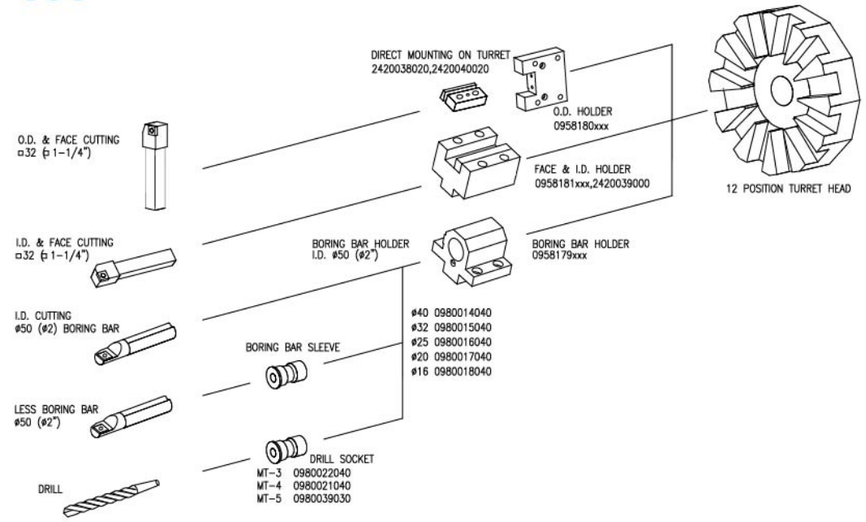

VTL-800M

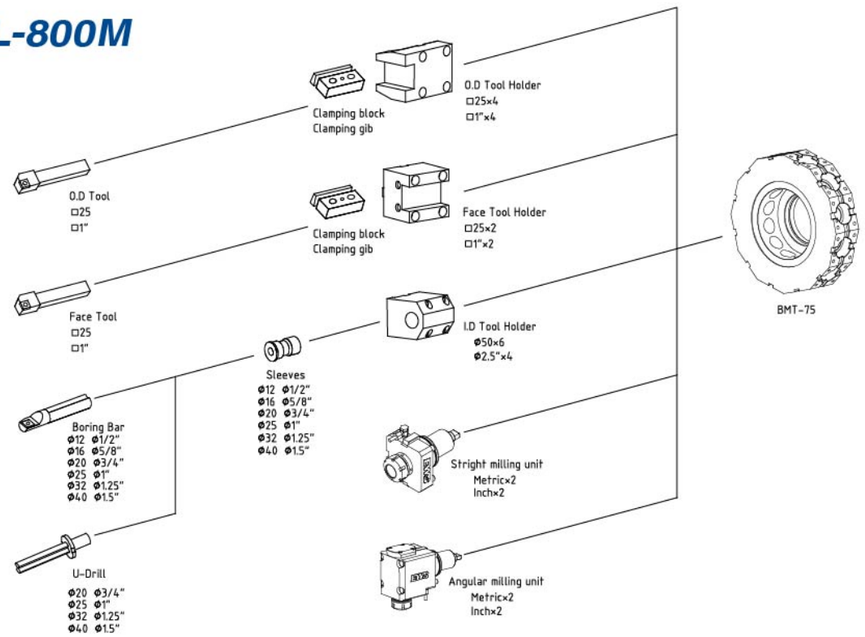

VTL SERIES
TOOLING INTERFERENCE

VTL-450

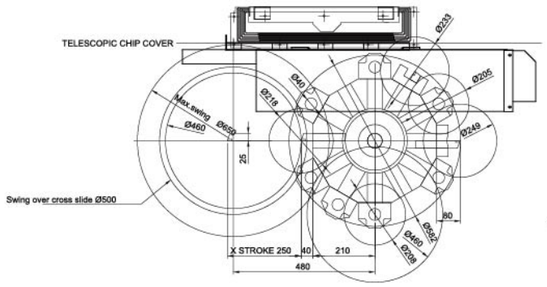

VTL-600

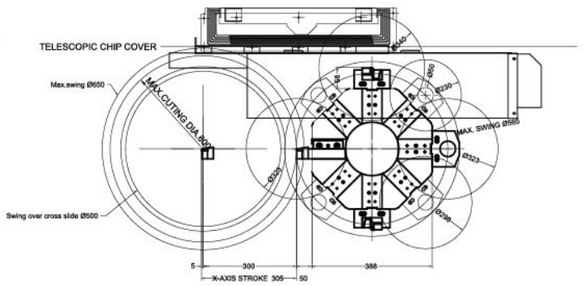

VTL-600M

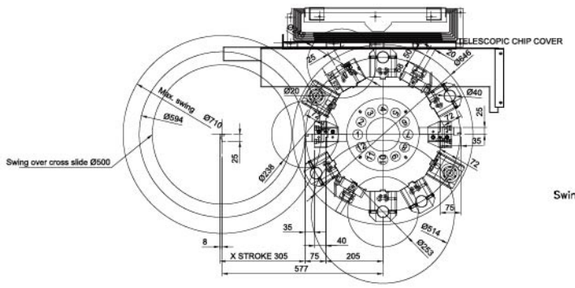

VTL-800

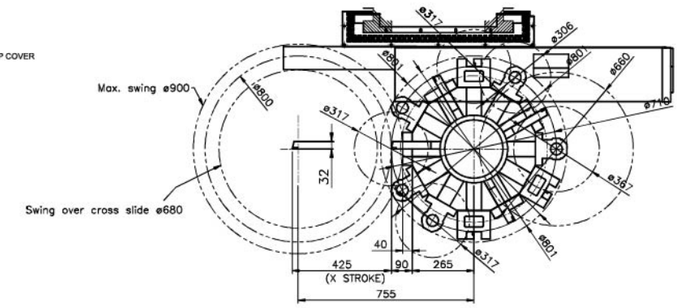

VTL-800M

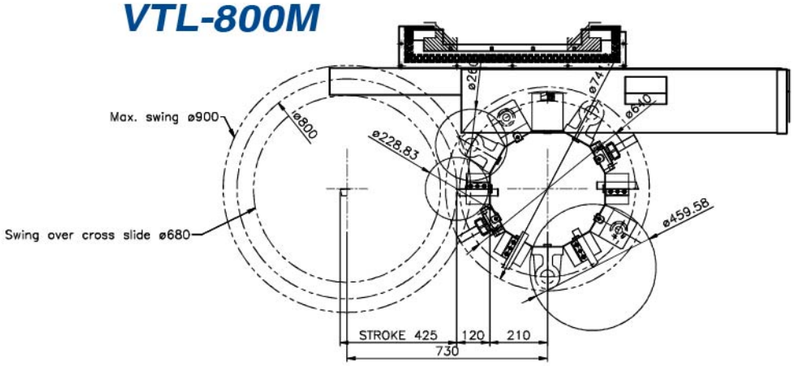

VTL SERIES
WORKING CAPACITY

VTL-450

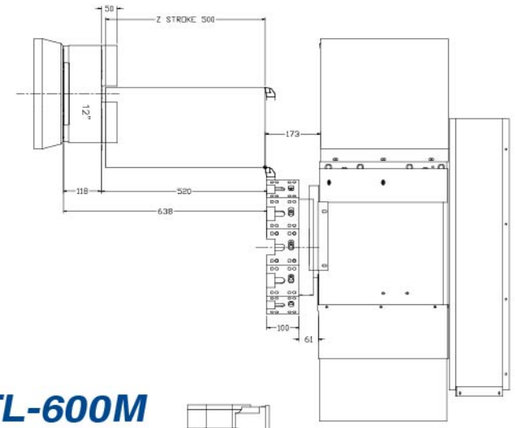

VTL-600

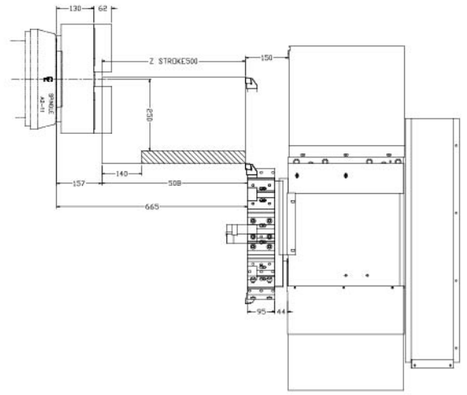

VTL-600M

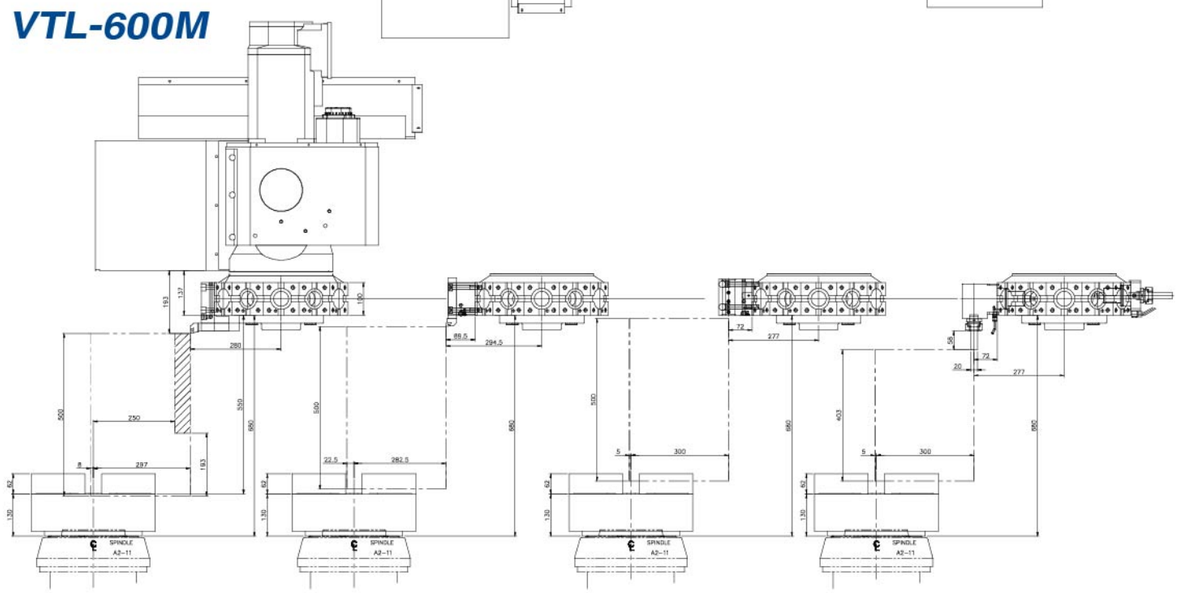

VTL-800

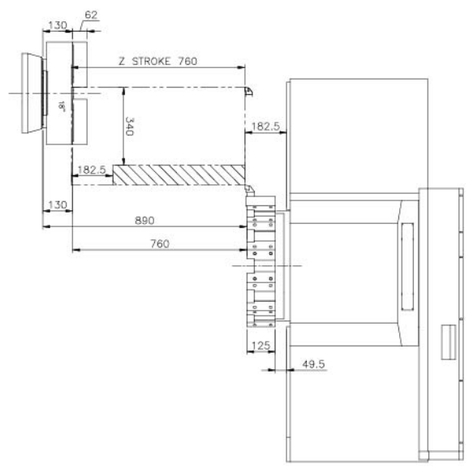

VTL SERIES DRAWING

WORKING CAPACITY

VTL-800M

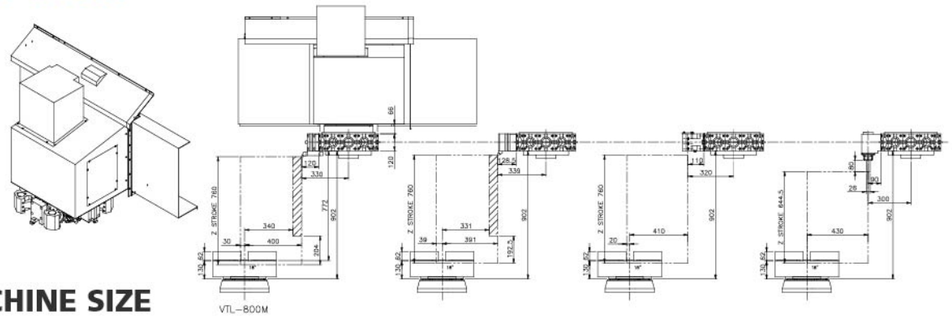

MACHINE SIZE

VTL-450/600

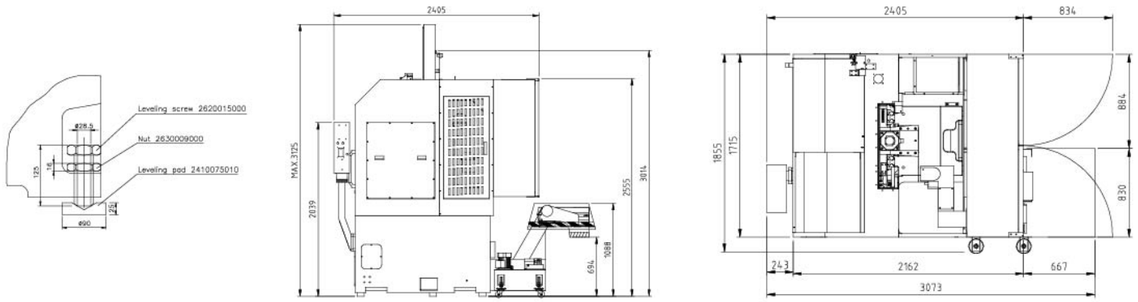

VTL-600M

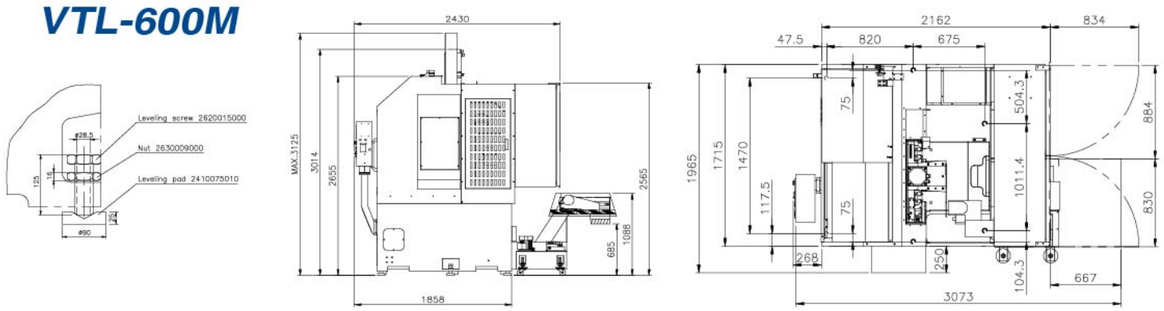

VTL-800/800M

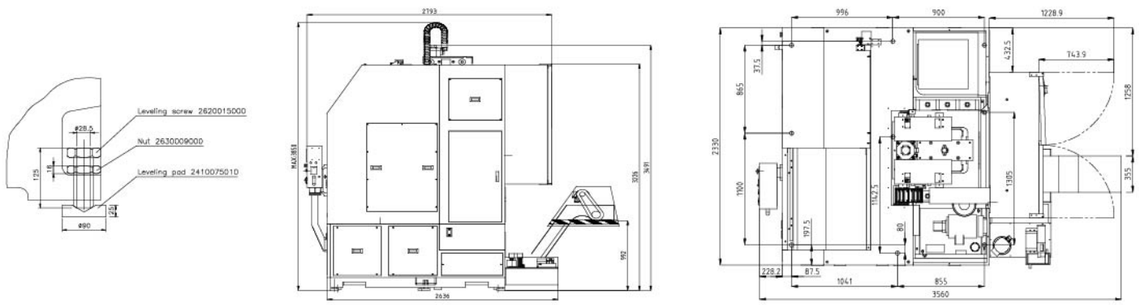

VTL SERIES MACHINE SPECIFICATIONS

ITEM \ MODEL		VTL-450	VTL-600	VTL-600M	VTL-800	VTL-800M
CAPACITY	Unit					
Max. swing	mm(in)	650 (25.6)	700 (27.6)	710 (27.9)	900 (35.4)	900 (35.4)
Max. turning diameter	mm(in)	460 (18.1)	600 (23.6)	600 (23.6)	800 (31.5)	800 (31.5)
Max. turning length	mm(in)	500 (19.7)	500 (19.7)	500 (19.7)	760 (30)	760 (30)
Max. workpiece weight (without tailstock)	kg	600	1000	1000	1300	1300
TRAVEL						
X axis travel	mm(in)	230+20 (9.05+0.8)	300+5(11.8+0.2)		400+25 (15.7+1)	410+20 (16.1+0.8)
Z axis travel	mm(in)	500 (19.7)	500 (19.7)	500 (19.7)	760 (30)	760 (30)
SPINDLE						
Spindle speed	rpm	2500	2000	2000	2000	2000
Chuck size	in	12	15	15	18	18
Type of spindle nose		A2-8	A2-11	A2-11	A2-11	A2-11
Spindle motor power	KW(HP)	22 (30)	22 (30)	22 (30)	30 (40)	30 (40)
TURRET						
Number of tool stations	PCS	12	8	12	12	12
Shank height for square tool	mm(in)	25 (1)	32 (1.3)	25(1) BMT 65	32 (1.3)	25(1) BMT 75
Shank diameter for boring bar	mm(in)	40 (1.6)	50 (2)	40(1.6) BMT 65	50 (2)	50(2) BMT 75
Turret indexing time (adjacent tool)	sec	1.0	1.0	0.18	1.5	0.25
Turret indexing time (180 deg)	sec	2.5	2.5	---	6.5	---
FEED RATE						
X axis rapid traverse	m(ft)/min	20(787.4)				
Z axis rapid traverse	m(ft)/min	24(945)			20(787.4)	
FEED MOTORS						
X axis motor	KW(HP)	3 (4)	3 (4)	3 (4)	4 (5.4)	4 (5.4)
Z axis motor	KW(HP)	4 (5.3)	4 (5.3)	4 (5.3)	7 (9.4)	7 (9.4)
MACHINE SIZE						
Height of machine (H)	mm(in)	3205(126.2)		3115(122.6)	3804(150)	
Floor space (LXW)	mm(in)	2925X1870(115X73.6)		2923X1965(115X77.3)	3435X2430(135X96)	3456X2430(136X96)
Total machine weight	kg	7000	7000	8000	13500	13700
Power requirement	KVA	45	45	50	55	70
Controller	FANUC	0i-T	0i-T	0i-T	0i-T	0i-T

All specifications, design and characteristics shown on this catalogue are subject to change without prior notice.

STANDARD ACCESSORIES

- Metric disc(VTL-450/VTL-600/VTL-800)
- Buzzer
- Heat exchanger
- Full enclosed splash guard
- 3 jaw non through hole chuck
- Foot switch
- Wedge V-belt
- High pressure pump
- chip conveyer
- BMT disc(VTL-600M / VTL-800M)

OPTIONAL ACCESSORIES

- Alarm lamp
- Chip bucket
- Transformer
- Mist separator
- Tool setter
- Inch disc
- Air conditioner
- Auto door
- High/low pressure
- Two speed gearbox
- Oil skimmer
- H.T.D belt
- Automatic workpiece measurement
- VDI disc
- Robot